HC160RFS
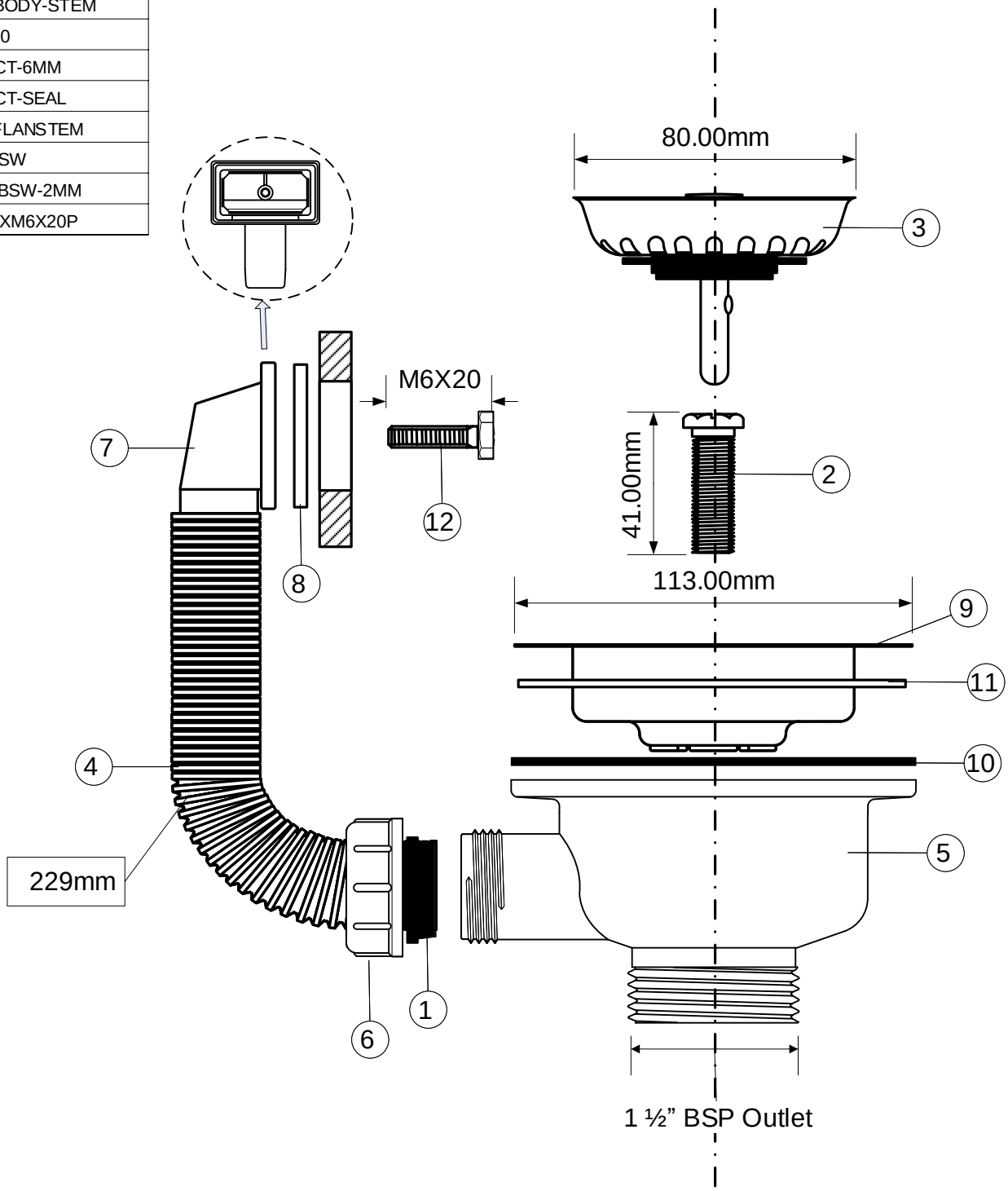
No	Part
1	1.0-ISO
2	BSWFERRULE-41
3	BWSTSS-TOP
4	FLEX25-229-BL
5	FSW50BODY-STEM
6	NUT-1.00
7	O/F-RECT-6MM
8	O/F-RECT-SEAL
9	P-F-BSFLANSTEM
10	P-RW-BSW
11	P-SPW-BSW-2MM
12	P-SSHEXM6X20P